DIMENSIONS

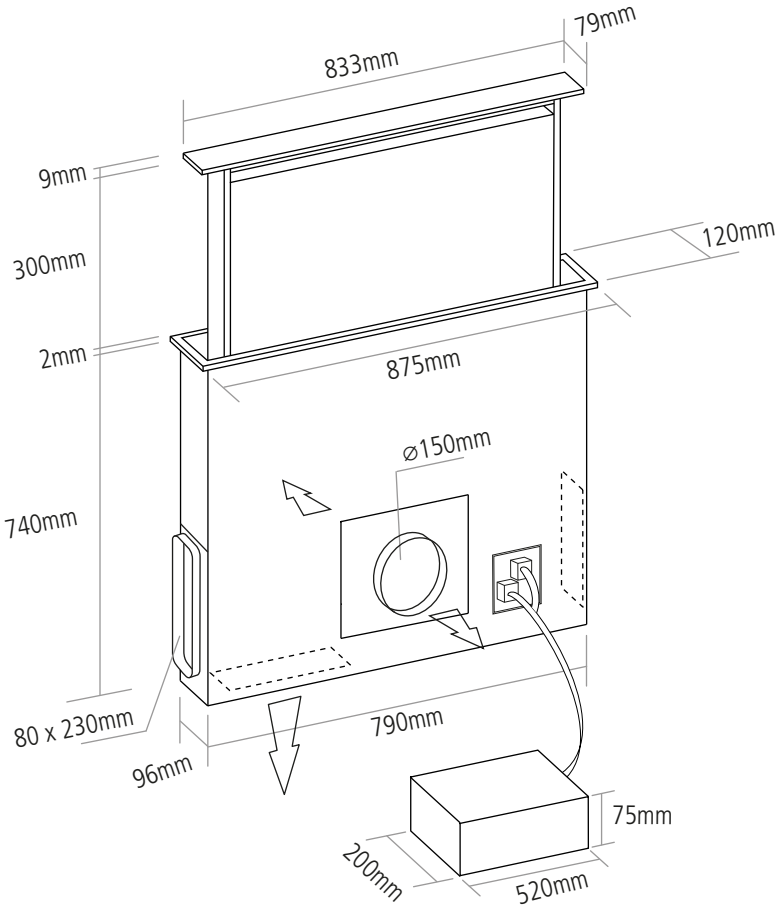

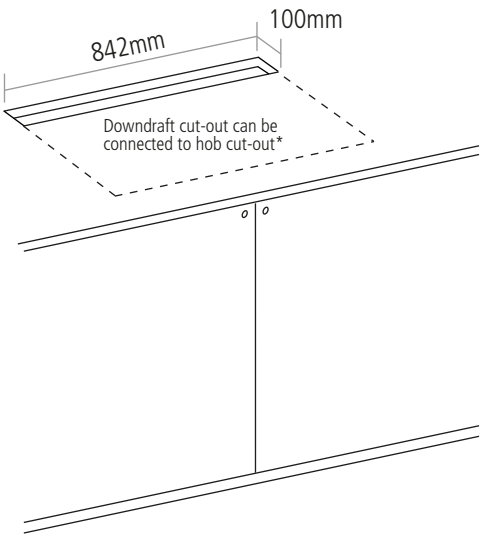

*For electric hobs only. Gas hobs will require a 50mm gap