DIMENSIONS

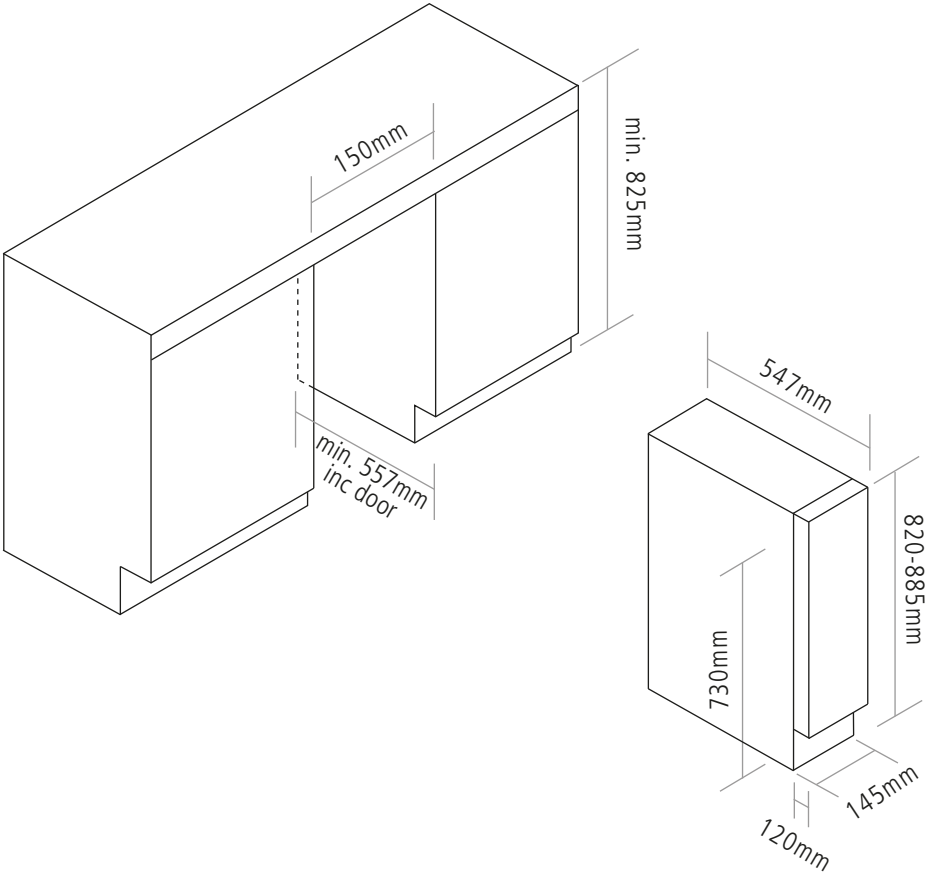
150mm
min. 825mm
min. 557mm
inc door
547mm
820-885mm
730mm
145mm
120mm