FULLY INTEGRATED DISHWASHER

PRODUCT CODE

Di632

DIMENSIONS

w:600mm

PERFORMANCE

e

Energy class D
Noise class C
Max. noise level 49dB
Energy consumption per 100 cycles 82kWh
Water consumption per cycle [economy] 11 Litres

FINISH AVAILABLE

Black gloss door top control panel

PROGRAMMES

6 **Programmes**

Universal/55°C
Intensive/65°C
Eco/50°C
90min/55°C
Glass/50°C
Rapid 30min/40°C

FUNCTIONS

- Delay timer 3, 6 or 9hrs
- Half load

FEATURES

- 12 Place settings
- Auto opening door to assist drying
- Max. plate diameter 30cm
- Stainless steel inner door and interior
- Plastic tub base
- Cutlery basket
- Electronic salt and rinse aid warning light
- Upper wine glass rack
- Titanium grey baskets
- Cold water connection
- Hidden heating element
- Adjustable upper basket
- Anti-bacterial filter system
- 6 Level water softening system
- Water overflow protection system

INSTALLATION

- Voltage 230V
- Rated load 1.93kW
- Fuse rating 13A
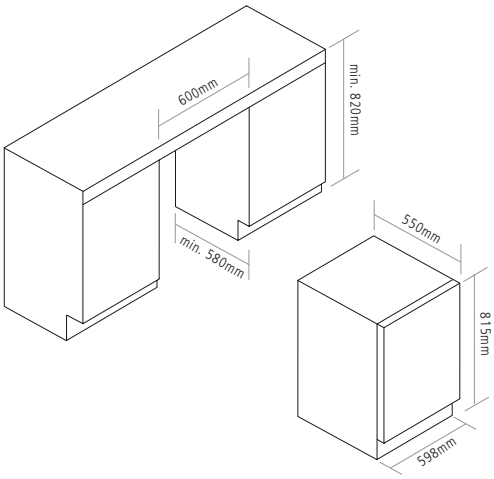
DIMENSIONS