caple

Built-under Fridge with Ice Box
Instruction Manual

RBR7

Contact Caple on 0117 938 7420 for spare parts or www.caple.co.uk

CONTENTS

Warnings	3
Environmental Protection	12
Technical Fiche	12
Electrical Connection	13
Product Dimensions	14
Description of the Appliance	15
Using the Appliance	16
Operating your Fridge	17
Accessories	18
Food Storage	19
Cleaning and Maintenance	26
Defrosting	27
Replacing the LED light	28
Transport and Repositioning	30
Troubleshooting	31
Energy Saving Tips	33
Caple Contact Details	36

SAFETY INSTRUCTIONS

Read these instructions carefully and completely before using your appliance. They provide you with important information regarding the safe installation, use and maintenance of the appliance as well as useful advice for getting the best out of your fridge. Keep this booklet in a safe place for future reference and pass on to any future owner.

- This appliance is produced in accordance with all applicable local and international standards and regulations.
- This appliance is intended to be used in household and similar applications such as:
  - › Staff kitchen areas in shops, offices and other working environments.
  - › Farm Houses.
  - › By clients in hotels, motels and other residential type environments.
  - › Bed and breakfast type environments.
- This appliance may only be used by persons (including children) with reduced physical, sensory or mental capabilities, or lack of experience and knowledge, if they are supervised whilst using it. They may only use it unsupervised if they have been shown how to use it in a safe manner. They must be able to recognise and understand the dangers of misuse.

SAFETY WITH CHILDREN:

- This appliance can be used by children aged from 8 years and above.
- Children less than 8 years of age should be kept away unless continuously supervised or they have been shown how to use it in a safe manner. Children must be able to understand and recognise the possible dangers caused by incorrect operation.
- Children should be supervised in the vicinity of the appliance.
- Never allow children to play with the appliance.
- Cleaning and user maintenance should not be carried out by children without supervision.
- Children aged from 3 to 8 years are allowed to load and unload refrigerating appliances.
- Materials used for packaging (nylon, staplers, Styrofoam etc) may cause harmful effects to children, they should be disposed of immediately.
- Children can injure themselves on an open door. Do not let children sit on the open door, lean against it or swing on it.

TECHNICAL SAFETY:

- Maintenance and repair work must be made only by authorised Caple service technicians. Installation and repair work that is carried out by unauthorised technicians may endanger you.

- While the appliance is under warranty, repairs should only be undertaken by a Caple authorised service technician. Otherwise the warranty will be invalidated.
- It is dangerous to alter or modify the specifications of the appliance in any way. The requirements for this appliance are stated on the rating label.
- Risk of injury due to electric shock. Any contact with live connections or tampering with the electrical or mechanical components of the appliance will endanger your safety and may lead to the appliance malfunctioning.
- To maintain the efficiency and safety of your appliance, we recommend you always use original spare parts and to call only our authorised Caple Service agents in case of need.
- Multi-socket adapters and extension leads should not be used to connect the appliance to the mains electricity supply.
- The electrical system of this appliance may be used safely only when it is correctly connected to an efficient earthing system in compliance with the safety standards currently in effect.
- Insert the plug into a socket with an efficient ground connection. If the socket has no ground contact or the plug does not match, we recommend you consult a qualified electrician for assistance.

- The appliance must be connected with a properly installed fused socket. The power supply (AC) and voltage at the operating point must match with the details on the rating plate of the appliance.
- Consult a qualified electrician or service person if the Grounding instructions are not completely understood, or if you have doubts on whether the appliance is properly grounded.
- The incorrect grounding may cause breakdown and electric shock.
- We do not accept responsibility for any damages that occur due to ungrounded usage.
- If the socket does not match the refrigerator plug, it must be replaced by the manufacturer, a service agent or similarly qualified persons in order to avoid a hazard.
- A specially grounded plug has been connected to the power cable of your refrigerator. This plug should be used with a specially grounded socket of 13 amperes. If there is no such socket in your house, please have one installed by an authorised electrician.

INSTALLATION WARNINGS:

- Prior to installation, ensure that the local distribution conditions (electricity voltage and frequency) and the requirements of the appliance are compatible.
- ⚠ WARNING: In order to avoid any hazards resulting from the instability of the appliance, it must be fixed in accordance with the following instructions.

- This appliance is not intended for use at altitudes exceeding 2000m.
- During installation the appliance must be completely disconnected from the mains electricity supply.
- Do not operate the appliance before it is fully installed.
- The appliance must be installed by an authorised technician.
- Your appliance must be at least 50cm away from stoves, gas ovens and heater cores, and at least 5 cm away from electrical ovens.
- If your appliance is placed next to a deep freezer, there must be at least 2cm between them to prevent humidity forming on the outer surface.
- Do not cover the body or top of fridge freezer with lace. This will affect the performance of your fridge freezer.
- Caple is not responsible for any damage that may be caused by defective placement and installation by unauthorised persons.
- When unpacking the appliance, make sure that it is not damaged during transportation.
- Check the appliance for any damage.
- In the case of any defect; do not use the appliance and contact your retailer or Caple Service immediately.
- ⚠ WARNING: When positioning the appliance, ensure the supply cord is not trapped or damaged.
- If the supply cord is damaged, it must be replaced by a

Caple service technician or similarly qualified persons in order to prevent a hazard.

- Never touch the power cord/plug with wet hands. This may cause a short circuit or electric shock.
- The plug must be accessible after installation.
- ⚠ WARNING: Do not locate multiple portable socket-outlets or portable power supplies at the rear of the appliance.
- Protect your appliance against atmospheric effects. Do not expose it to effects such as sun, rain, snow etc.

DURING USE:

- Place drinks with high alcohol content vertically in the fridge compartment and make sure their tops are tightly closed.
- If you know you will not be using the appliance for a while switch it off from the main supply and unplug it.
- ⚠ WARNING: Keep ventilation openings, in the appliance enclosure or in the built-in structure, clear of obstruction.
- Do not place your appliance on a carpeted surface as this will prevent adequate ventilation.
- When the appliance is not in use, we recommend you turn it off, and isolate it from the electrical supply.
- This appliance must be used in the vertical position on a flat surface.
- ⚠ WARNING: Do not use electrical appliances inside

the food storage compartments of the appliance, unless they are of the type recommended by the manufacturer.

- The manufacturer will not be held liable for any damages that might arise out of incorrect or improper use of the appliance.
- Do not touch frozen goods with wet hands. Your hands may freeze to the frozen food.
- Do not eat ice-cream or ice cubes immediately after they are removed from the freezer compartment. Frozen food can cause frost burn to the lips and tongue.
- Do not re-freeze partially or fully thawed food. This may cause health issues such as food poisoning. Defrosted food may only be re-frozen after it has been cooked.
- Do not place glass bottles or cans containing carbonated drinks in the freezer compartment as they will burst when the contents freezes.
- If using the appliance to quickly cool drinks, do not leave bottles inside the freezer compartment for more than 1 hour, otherwise they could burst.
- Two-star frozen-food compartments are suitable for storing pre-frozen food, storing or making ice cream and making ice cubes.
- One-, two- and three-star compartments are not suitable for the freezing of fresh food.

CLEANING AND MAINTENANCE:

- Clean the appliance thoroughly before use.
- Always switch off the appliance from the mains isolating the electrical supply before any cleaning or maintenance.
- ⚠ WARNING: Do not use mechanical devices or other means to accelerate the defrosting process, other than those recommended by the manufacturer.

TRANSPORT:

- Always transport the appliance in its original packaging and in an upright position.
- ⚠ WARNING: Do not damage the refrigerant circuit.
- ⚠ If your appliance uses R600a as a refrigerant (this information will be provided on the label of the appliance) you should take care during transportation and installation to prevent the cooler elements from being damaged. R600a is an environmentally friendly and natural gas, but it is explosive. In the event of a leak due to damage of the cooler elements, move your appliance away from open flames or heat sources and ventilate the room where the appliance is located for a few minutes.
- Never use the door handles for lifting.
- The appliance is heavy and could cause injury, it must be transported by two people.

DISPOSAL OF OLD APPLIANCE:

- Old fridges and freezers contain isolation material and refrigerant with CFC. Therefore, take care not to harm environment when you are discarding your old fridges.
- If your old fridge or freezer has a lock, break or remove the lock before discarding it, because children may get trapped inside it and may cause an accident
- Be careful to avoid damaging the pipework before disposal, e.g. by puncturing coolant channels, bending pipework, scratching the surface coating.

WARNING: Serious injury or death risk

RISK OF ELECTRIC SHOCK: Dangerous voltage risk

FIRE: Warning; Risk of fire / flammable materials

CAUTION: Injury or property damage risk

IMPORTANT: Operating the system correctly

Symbol ISO 7010 W021

Warning; Risk of fire / flammable materials

ENVIRONMENTAL PROTECTION

Waste electrical products should not be disposed of with household waste. Please recycle where facilities exist. Check with your Local Authority or retailer for recycling advice. This appliance is marked according to the European Directive on Waste Electrical and Electronic Equipment (WEEE).

By ensuring this product is disposed of correctly, you will help prevent potential negative consequences for the environment and human health, which could otherwise be caused by inappropriate waste handling of this product. The symbol on the product indicates that this product may not be treated as household waste. Instead it shall be handed over to the applicable collection point for the recycling of electrical and electronic equipment. Disposal must be carried out in accordance with local environmental regulations for waste disposal.

For more detailed information about treatment, recovery and recycling of this product, please contact your local council, your household waste disposal service or the retailer where you purchased the product.

CE DECLARATIONS OF CONFORMITY CE

This appliance has been manufactured to the strictest standards and complies with all applicable legislation, Low Voltage Directive (LVD) and Electromagnetic Compatibility (EMC).

TECHNICAL FICHE

This appliance conforms to all current and applicable energy regulations. To view the Technical Fiche that supports the energy labelling data, please visit the product page on our website www.caple.co.uk

WARRANTY

Your new appliance is covered by warranty. The warranty card is enclosed - if it is missing, you must provide the following information to your retailer in order to receive a replacement: date of purchase, model and serial number (placed on the inside of the appliance storage drawer). Registration can also be completed online by visiting www.caple.co.uk.
Ensure you keep your warranty card safe, you may need to show it to Caple Service together with proof of purchase.
If you fail to show your warranty card you will incur all repair charges.
Spare parts are only available from Caple Service and spare parts authorised centres.

ELECTRICAL CONNECTION

For your safety please read the following information

WARNING

This appliance must be earthed.

This appliance operates from 220-240 volts and should be protected by a 13 amp fuse in the plug.

IMPORTANT

Do not use the appliance without the fuse cover in position.

The appliance is supplied with a standard 13 amp 3-pin mains plug fitted with a 13-amp fuse. Should the fuse require replacement, it must be replaced with a fuse rated at 13 amp and approved to BS1362.

The mains lead of this appliance has been fitted with a BS 1363A 13A fused plug. To change a fuse in this type of plug, follow the steps below:

1. Remove the fuse cover and fuse.
2. Fit replacement 13A fuse, ASTA approved to BS 1362 type, into the fuse cover.
3. Replace fuse cover.

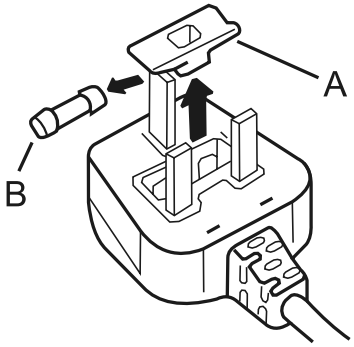

PRODUCT DIMENSIONS

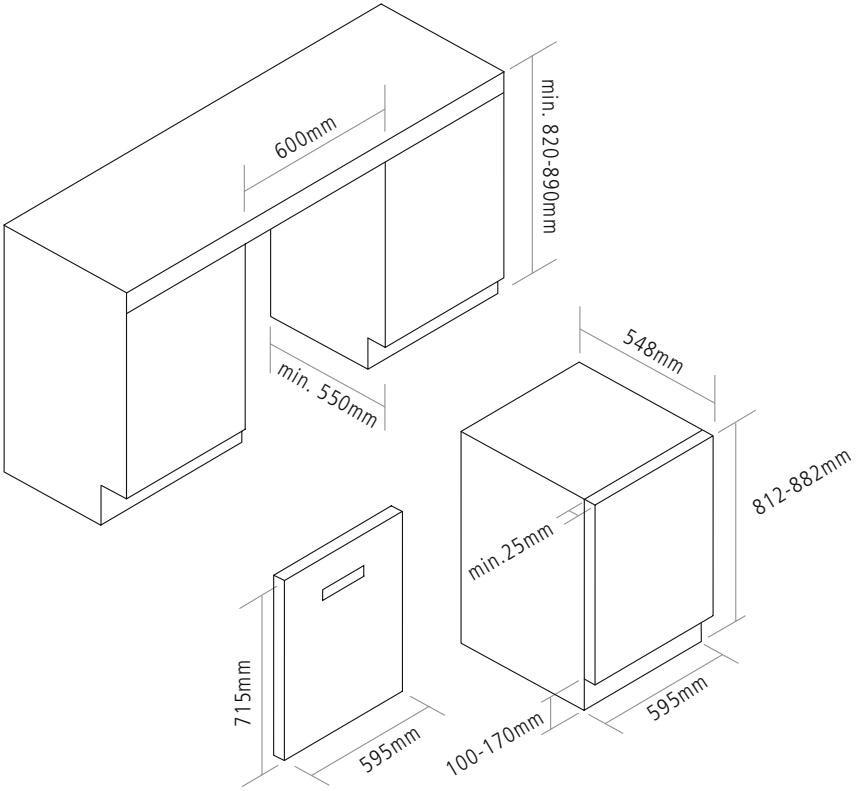

NOTE:

Please refer to seperate installation sheet for details on how to install your appliance.

DESCRIPTION OF THE APPLIANCE

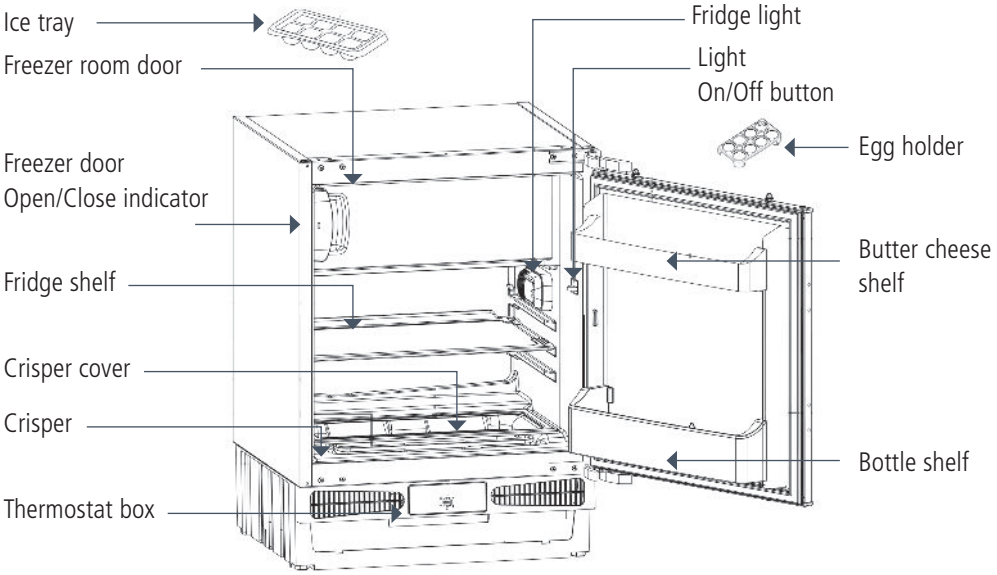

This presentation is only for information about the parts of the appliance. Parts may vary according to the appliance model.

USING THE APPLIANCE

› Before using your fridge, wipe all parts with a solution of warm water and a teaspoon of sodium bicarbonate. Then, rinse with clean water and dry. Return all parts to the fridge after cleaning.
› Remove all transport tapes and foam protection pieces. Clean the interior with a cloth dampened in lukewarm soap and water. Rinse with clean water and dry.
› The adjustable front legs should be stabilised at an appropriate height to allow your fridge to operate in a stable and proper way. You can adjust the legs by turning them clockwise (or in the opposite direction). This should be done before placing food in the fridge.
› Your fridge may have an odour when it is operated for the first time. This is normal and the odour will fade when your fridge starts to cool.

WARNING

Connect to the electrical socket but do not switch the power to the fridge on for at least 12 hours. The coolant within the product needs time to settle after it has been transported and put into position, failure to do this will affect the cooling performance of your appliance.

OPERATING YOUR FRIDGE

THERMOSTAT SETTING

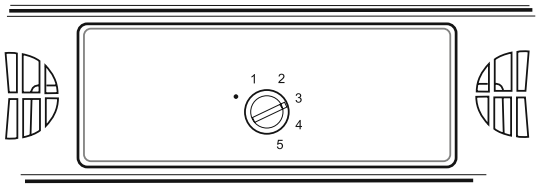

IMPORTANT NOTE

Do not try to rotate knob beyond 1 position it will stop your appliance.

- The thermostat automatically regulates the inside temperature of the refrigerator compartment and freezer compartment. By rotating the knob from position 1 to 5, colder temperatures can be obtained.
- For short-term storage of food in the fridge and freezer compartment, you can set the knob between minimum and medium position (1-3).
- For long-term storage of food in the fridge and freezer compartment, you can set knob medium position (3-4).
- For freezing fresh food, or to chill food quickly, set the knob to the high position (5). Once the food is fully frozen or chilled, reset the thermostat to its original position.
- Note that; the ambient temperature, temperature of the freshly stored food, and how often the door is opened, affects the temperature in the refrigerator and freezer compartments. If required, change the temperature setting.
- When you first switch on the appliance, you should ideally try to run it without any food in for 24 hours and not open the door. If you need to use it straight away, try not to put much food inside.
- If the unit is switched off or unplugged, you must allow at least 5 minutes before restarting in order not to damage the compressor.

NOTE:

Do not try to rotate the knob anti-clockwise beyond position 1, it will stop the appliance from working.

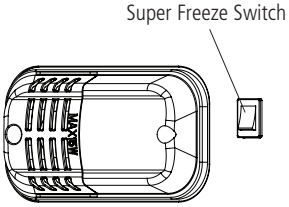

SUPER FREEZING

For maximum freezing capacity, press this switch 24 hours before placing food in the freezing compartment. In order to save energy, please turn the switch Off 24 hours after placing food in the freezer.

Your fridge is designed to operate in the ambient temperature intervals stated in the standards, according to the climate class stated in the information label. We do not recommend operating your fridge out of stated temperatures value limits in terms of cooling effectiveness.

CLIMATE CLASS	AMBIENT TEMPERATURE
T	Between 16 and 43 (°C)
ST	Between 16 and 38 (°C)
N	Between 16 and 32 (°C)
SN	Between 10 and 32 (°C)

This appliance is designed for use at an ambient temperature within the 10°C - 32°C range.

"DOOR OPEN" INDICATOR

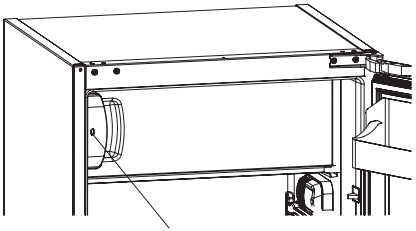
"Door Open" Indicator

- The "Door Open" indicator on the handle shows whether the door has closed properly or whether it is still open.
- If the indicator is red, the door is still open.
- If the indicator is white, the door is properly closed.
- Observe that the freezer's door should always be kept closed. This will prevent food products from defrosting; it will avoid heavy ice and frost build-up inside the freezer and an unnecessary increase in energy consumption.

ACCESSORIES

ICE TRAY

- Fill the ice tray with water and place in freezer compartment.
- After the water has completely turned into ice, you can twist the tray as shown below to release the ice cubes.

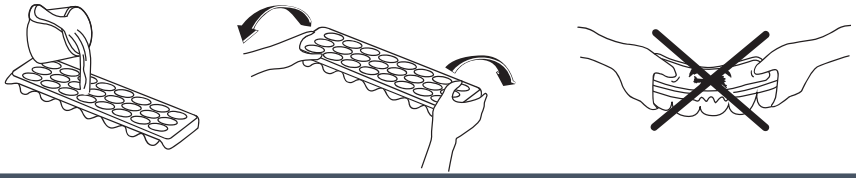

FOOD STORAGE

REFRIGERATOR COMPARTMENT

- To reduce humidity and avoid the consequent formation of frost, always store liquids in sealed containers in the refrigerator. Frost tends to concentrate in the coldest parts of the evaporating liquid and, in time, your appliance will require more frequent defrosting.
- Never place warm food in the refrigerator. Warm food should be allowed to cool at room temperature and should be arranged to ensure adequate air circulation in the refrigerator compartment.
- Make sure no items are in direct contact with the rear wall of the appliance as frost will develop and packaging will stick to it. Do not open the refrigerator door frequently.
- We recommend that meat and clean fish are loosely wrapped and stored on the glass shelf just above the vegetable bin where the air is cooler, as this provides the best storage conditions.
- Store loose fruit and vegetable items in the crisper containers.
- Storing fruit and vegetables separately helps prevent ethylene-sensitive vegetables (green leaves, broccoli, carrot, etc.) being affected by ethylene-releaser fruits (banana, peach, apricot, etc.).
- Do not put wet vegetables into the refrigerator.
- Storage time for all food products depends on the initial quality of the food and an uninterrupted refrigeration cycle before refrigerator storage.
- To avoid cross-contamination do not store meat products with fruit and vegetables. Water leaking from meat may contaminate other products in the refrigerator. You should package meat products and clean any leakages on the shelves.
- Do not put food in front of the air flow passage.
- Consume packaged foods before the recommended expiry date.

NOTE:

Potatoes, onions and garlic should not be stored in the refrigerator. The table below is a quick guide to show you the most efficient way to store the major food groups in your refrigerator compartment.

To avoid contamination of food, please respect the following instructions:

› Opening the door for long periods can cause significant increase of the temperature in the compartments of the appliance.
› Regularly clean surfaces that can come in contact with food accessible drainage systems.
› Store raw meat and fish in suitable containers in the refrigerator, so that it is not in contact with or drips onto other food.
› If the refrigerating appliance is left empty for long periods, switch off, defrost, clean, dry and leave the door open to prevent mould developing within the appliance.

FOOD	MAXIMUM STORAGE TIME*	HOW AND WHERE TO STORE
Vegetables and fruits	1 week	Vegetable bin
Meat and fish	2-3 days	Wrap in plastic foil, bags, or in a meat container and store on the glass shelf
Fresh cheese	3-4 days	On the designated door shelf
Butter and margarine	1 week	On the designated door shelf
Bottled products e.g. milk and yoghurt	Until the expiry date recommended by the producer	On the designated door shelf
Eggs	1 month	On the designated egg tray
Cooked food	2 days	All shelves

* These are guidelines only, always refer to the expiry date, or best before date recommended by the producer.

FREEZER COMPARTMENT

› The freezer is used for storing frozen food, freezing fresh food, and making ice cubes.
› To freeze fresh food, ensure that as much of the surface of the food as possible is in contact with the cooling surface.
› Do not store fresh food next to frozen food as it can thaw the frozen food.
› Before freezing fresh food, divide it into portions that can be consumed in one sitting.
› Consume thawed frozen food within a short period of time after defrosting
› Never place warm food in the freezer compartment as it will thaw the frozen food.
› Always follow the manufacturer's instructions on food packaging when storing frozen food. If no information is provided food, should not be stored for more than 3 months from the date of purchase.
› When purchasing frozen food, make sure that it has been stored under appropriate conditions and that the packaging is not damaged.
› Frozen food should be transported in appropriate containers and placed in the freezer as soon as possible.
› Do not purchase frozen food if the packaging shows signs of humidity band abnormal swelling.
› It is probable that it has been stored at an unsuitable temperature and that the contents have deteriorated.
› The storage life of frozen food depends on the room temperature, the thermostat setting, how often the door is opened, the type of food, and the length of time required to transport the product from the shop to your home. Always follow the instructions printed on the packaging and never exceed the maximum storage life indicated.
› The maximum amount of fresh food (in kg) that can be frozen in 24 hours is indicated on the appliance label.
› To use the maximum capacity of the freezer compartment, use the glass shelves for the upper and middle section, and use the lower basket for the bottom section.

NOTE:

If you attempt to open the freezer door immediately after closing it, you will find that it will not open easily. This is normal. Once equilibrium has been reached, the door will open easily.

IMPORTANT NOTE:

- Never refreeze thawed frozen food.
- The taste of some spices found in cooked dishes (aniseed, watercress, vinegar, assorted spices, ginger, garlic, onion, mustard, thyme, black pepper, etc.) changes and they assume a strong taste when they are stored for a long period of time. Therefore, add small amounts of spices to food to be frozen, or the desired spice should be added after the food has thawed.
- The storage time of food is dependent on the type of oil used. Suitable oils are margarine, calf fat, olive oil and butter. Unsuitable oils are peanut oil and pig fat.
- Food in liquid form should be frozen in plastic cups and other food should be frozen in plastic or bags or containers. The table below is a quick guide to show you the most efficient way to store the major food groups in your freezer compartment.

MEAT & FISH	PREPARATION	MAXIMUM STORAGE TIME (MONTHS)
Steak	Wrap in foil	6 - 8
Lamb Meat	Wrap in foil	6 - 8
Veal roast	Wrap in foil	6 - 8
Veal cubes	In small pieces	6 - 8
Lamb cubes	In pieces	4 - 8
Minced meat	In packaging without using spices	1 - 3
Giblets (pieces)	In pieces	1 - 3
Bologna sausage/salami	Should be kept packaged even if it has a membrane	
Chicken and turkey	Wrap in foil	4 - 6
Goose and duck	Wrap in foil	4 - 6
Deer, rabbit, wild boar	In 2.5 kg portions or as fillets	6 - 8
Freshwater fish (Salmon, Carp, Crane, Catfish)	After cleaning the bowels and scales of the fish,wash and dry it. If necessary, remove the tail and head.	2
Lean fish (Bass, Turbot, Flounder)		4
Fatty fishes (Tuna, Mackarel, Bluefish, Anchovy)		2 - 4
Shellfish	Clean and in a bag	4 - 6
Caviar	In its packaging, or in an aluminium or plastic container	2 - 3

NOTE:

Thawed frozen meat should be cooked as fresh meat. If the meat is not cooked after defrosting, it must not be re-frozen.

VEGETABLES AND FRUITS	PREPARATION	MAXIMUM STORAGE TIME (MONTHS)
String beans and beans	Wash, cut into small pieces and boil in water	10 - 13
Beans	Hull, wash and boil in water	12
Cabbage	Clean and boil in water	6 - 8
Carrot	Clean, cut into slices and boil in water	12
Pepper	Cut the stem, cut into two pieces, remove the core and boil in water	8 - 10
Spinach	Wash and boil in water	6 - 9
Cauliflower	Remove the leaves, cut the heart into pieces and leave it in water with a little lemon juice for a while	10 - 12
Aubergine	Cut into pieces of 2cm after washing	10 - 12
Sweetcorn	Clean and pack with its stem or as sweetcorn	12
Apple and pear	Peel and slice	8 - 10
Apricot and Peach	Cut into two pieces and remove the stone	4 - 6
Strawberry and Blackberry	Wash and hull	8 - 12
Cooked fruits	Add 10 % of sugar to the container	12
Plum, cherry, raspberry	Wash and hull the stems	8 - 12

	MAXIMUM STORAGE TIME (MONTHS)	THAWING TIME AT ROOM TEMPERATURE (HOURS)	THAWING TIME IN OVEN (MINUTES)
Bread	4 - 6	2 - 3	4-5 (220-225 °C)
Biscuits	3 - 6	1 - 1.5	5-8 (190-200 °C)
Pastry	1 - 3	2 - 3	5-10 (200-225 °C)
Pie	1 - 1.5	3 - 4	5-8 (190-200 °C)
Filo dough	2 - 3	1 - 1.5	5-8 (190-200 °C)
Pizza	2 - 3	2 - 4	15-20 (200 °C)
DAIRY PRODUCTS	**PREPARATION**	**MAXIMUM STORAGE TIME (MONTHS)**	**STORAGE CONDITIONS**
Packet (Homogenized) Milk	In its own packet	2 - 3	Pure Milk – in its own packet
Cheese - excluding white cheese	In slices	6 - 8	Original packaging may be used for short-term storage. Keep wrapped in foil for longer periods.
Butter, margarine	In its packaging	6	

CLEANING AND MAINTENANCE

Disconnect the unit from the power supply before cleaning.

Do not wash your appliance by pouring water on it.

Do not use abrasive products, detergents or soaps for cleaning the appliance. After washing, rinse with clean water and dry carefully. When you have finished cleaning, reconnect the plug to the mains supply with dry hands.

› Make sure that no water enters the lamp housing and other electrical components.
› The appliance should be cleaned regularly using a solution of bicarbonate of soda and lukewarm water.
› Clean the accessories separately by hand with soap and water. Do not wash accessories in a dishwasher.
› Clean the condenser with a brush at least twice a year. This will help you to save on energy costs and increase productivity.

NOTE:

The power supply must be disconnected during cleaning.

DEFROSTING

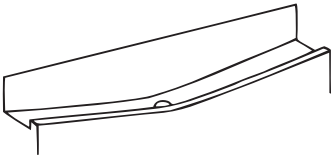

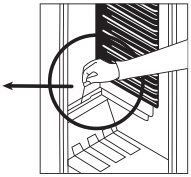

REFRIGERATOR COMPARTMENT

› Defrosting occurs automatically in the refrigerator compartment during operation. The water is collected by the evaporation tray and evaporates automatically.

› The evaporation tray and the water drain hole should be cleaned periodically with the defrost drain plug to prevent the water from collecting at the bottom of the refrigerator instead of flowing out.

› You can also clean the drain hole by pouring half a glass of water down it.

FREEZER COMPARTMENT

The frost accumulated in the freezer compartment should be removed periodically. The freezer compartment should be cleaned in the same way as the refrigerator compartment, with the defrost process being completed twice a year.

› The day before you defrost, set the thermostat dial to position "5", to freeze the food completely.

› During defrosting, frozen foods should be wrapped in several layers of paper and kept in a cool place. The inevitable rise in temperature will shorten their storage life. Remember to use these foods within a relatively short period of time.

› Set thermostat knob to position "." or unplug the unit; leave the door open until completely defrosted.

› To accelerate the defrosting process, one or more basins of warm water can be placed in the freezer compartment.

› Dry the inside of the unit carefully and set the thermostat knob to position "5".

REPLACING THE LED LIGHT

LIGHT SOURCE ENERGY CLASS

This product contains a light source of energy efficiency class E.

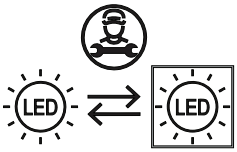

The LED light must be replaced by an authorised engineer or similar only. For more information, please contact Caple service - **0117 938 7420** or **service@caple.co.uk**

Unplug the unit from the power supply before starting the process

1. Remove the screw on the light cover by screw driver (Fig.1).
2. Press the hooks on light cover (Fig.2).
3. Open the light cover towards arrow when top hooks pull out from housing (Fig.3).
4. Pull out the cover towards arrow remove it (Fig.4).
5. Turn the light bulb counter clockwise and remove it (Fig.5).
6. Change the present light bulb with a new one of not more than 15W (Fig.5).
7. Implement the steps in reverse order.
8. After waiting 5 minutes, plug the unit.

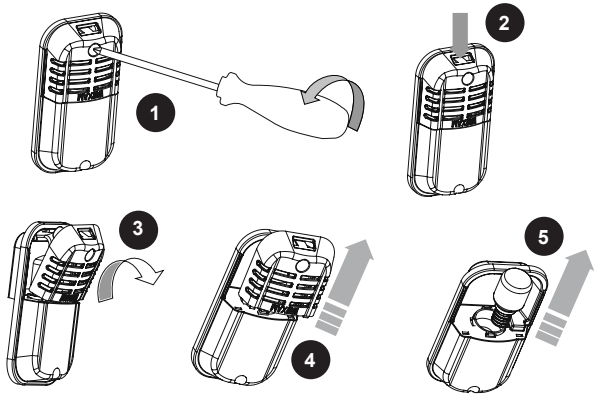

HOLIDAY

SHORT HOLIDAYS

Leave the freezer operating during holidays of less than three weeks.

LONG HOLIDAY

If the appliance will not be used for several months, remove all items and turn off the appliance. Set the thermostat to "•" position, defrost and clean your freezer. To prevent odour and mould growth, leave the door open slightly (blocking it open if necessary).

TRANSPORT AND REPOSITIONING

- The original packaging and foam may be kept for re-transportation (optional).
- Fasten your appliance with thick packaging, bands or strong cords and follow the instructions for transportation on the packaging.
- Remove all movable parts (shelves, accessories, vegetable bins, and so on) or fix them into the appliance against shocks using bands/tape when re-positioning or transporting.
- ⚠ Always carry your appliance in the upright position.

TROUBLESHOOTING

BEFORE CALLING FOR SERVICE

Reviewing the information below may save you from calling for service.

THE APPLIANCE DOES NOT OPERATE CHECK IF:

› There is power to the unit
› The mains is connected
› The thermostat setting is on the "•" position
› The socket is defective. To check this, plug another working appliance into the same socket.

THE APPLIANCE PERFORMS POORLY CHECK IF:

› The appliance is overloaded
› The doors are closed properly
› There is any dust on the condenser
› There is enough space near the rear and side walls.

THE APPLIANCE IS NOISY

The cooling gas which circulates in the refrigerator circuit may make a slight noise (bubbling sound) even when the compressor is not running. Do not worry, this is normal. If you hear a different sound, check whether:

› The appliance is level
› Anything is touching the rear of the appliance
› Objects in the appliance are vibrating.

THE DOOR IS NOT PROPERLY OPENED OR CLOSED CHECK IF:

› Food packages preventing the door from being closed.
› Door compartments, shelves and drawers have been properly placed.
› The door seals are defective or torn?
› The refrigerator is standing on an even ground.

THERE IS WATER IN THE LOWER PART OF THE REFRIGERATOR CHECK IF:

› The drain hole for the water is not clogged (use defrost drain plug to clean the drain hole).

RECOMMENDATIONS

› If the appliance is switched off or unplugged, wait at least 5 minutes before plugging the appliance in or restarting it in order to prevent damage to the compressor.

› The cooling unit of your refrigerator is located at the rear of the appliance. Therefore, water droplets or ice may form on the rear surface of your freezer due to the operation of the compressor at specified intervals. This is normal, there is no need to perform a defrosting operation unless there is excessive ice.

› The appliance you have purchased is designed for domestic use only. It is not suitable for commercial or common use. If the consumer uses the appliance in a way that does not comply with this, we emphasise that the manufacturer and the dealer will not be responsible for any repair and failure within the guarantee period.

If the problem persists or more help is required, please contact our Caple service team on **0117 938 7420** or via email **service@caple.co.uk**.

SPARE PARTS AVAILABILITY

The original spare parts for some specific components are available for a minimum of 7 or 10 years, based on the type of component, from the placing on the market of the last unit of the model.

For more info and to order spares, please contact Caple service or visit our website **www.caple.co.uk**

ENERGY SAVING TIPS

1. Install the appliance in a cool, well ventilated room, but not in direct sunlight and not near a heat source (such as a radiator or oven) otherwise an insulating plate should be used.

2. Allow warm food and drinks to cool before placing them inside the appliance.

3. Place thawing food in the refrigerator compartment. The low temperature of the frozen food will help cool the refrigerator compartment while the food is thawing. This will save energy. Frozen food left to thaw outside of the appliance will result in a waste of energy.

4. Drinks or other liquids should be covered when inside the appliance. If left uncovered, the humidity inside the appliance will increase, therefore the appliance uses more energy. Keeping drinks and other liquids covered helps preserve their smell and taste.

5. Avoid keeping the doors open for long periods and opening the doors too frequently as warm air will enter the appliance and cause the compressor to switch on unnecessarily often.

6. Keep the covers of the different temperature compartments (such as the crisper and chiller) closed.

7. The door gasket must be clean and pliable. Replace gaskets if worn.

NOTES:

NOTES:

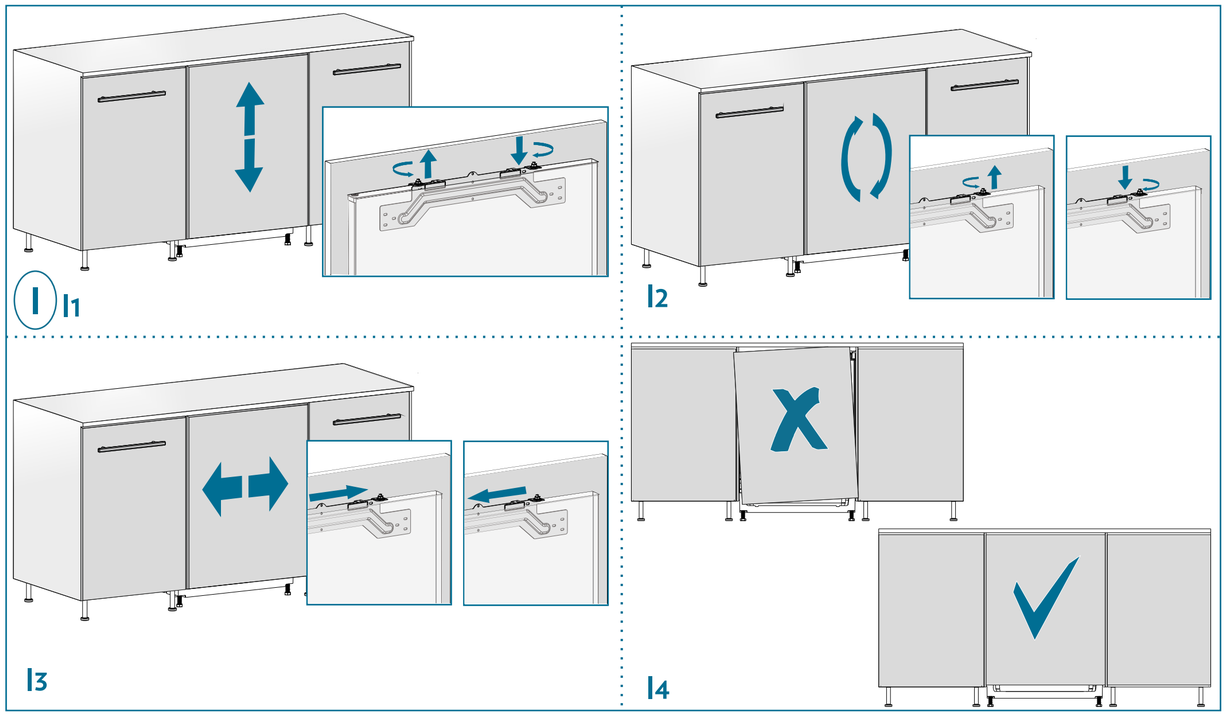
I
I1
I2
I3
I4

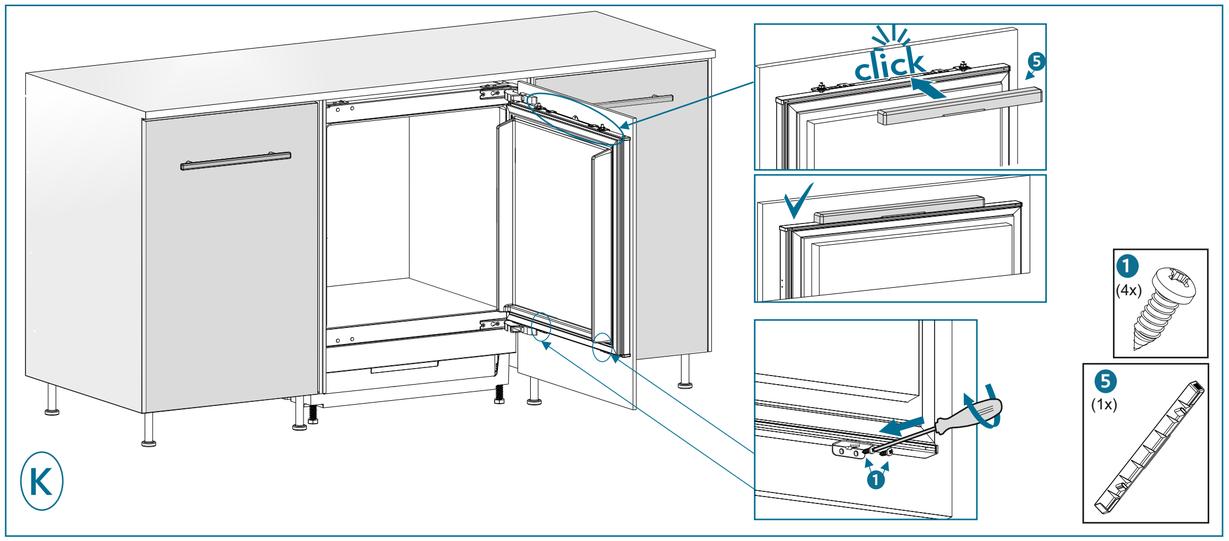
click
5
1
(4x)
5
(1x)
K

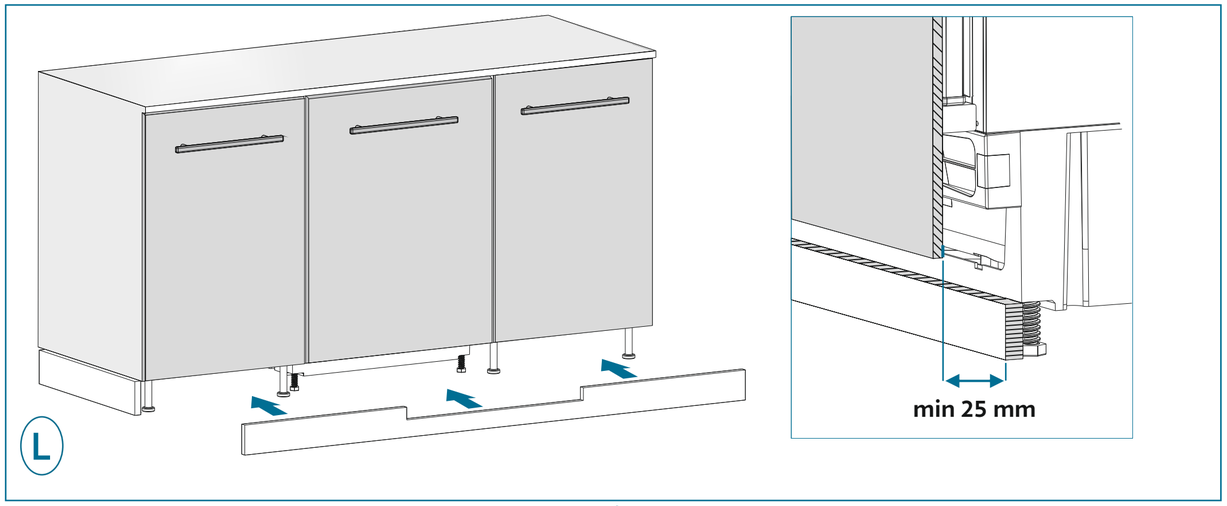
min 25 mm
L

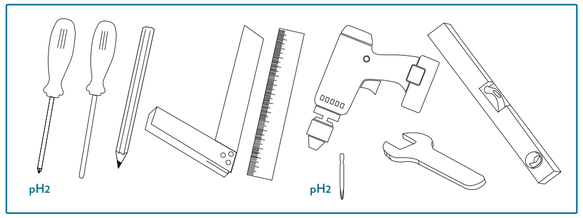
pH2
pH2

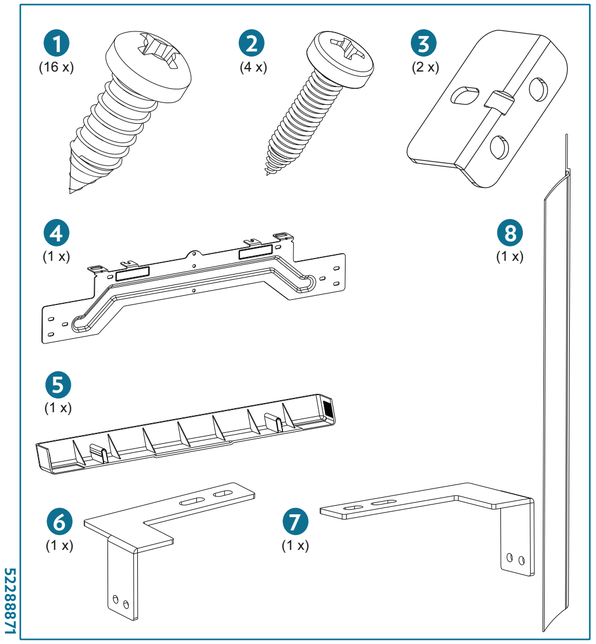
1
(16 x)
2
(4 x)
3
(2 x)
4
(1 x)
8
(1 x)
5
(1 x)
6
(1 x)
7
(1 x)

52288871

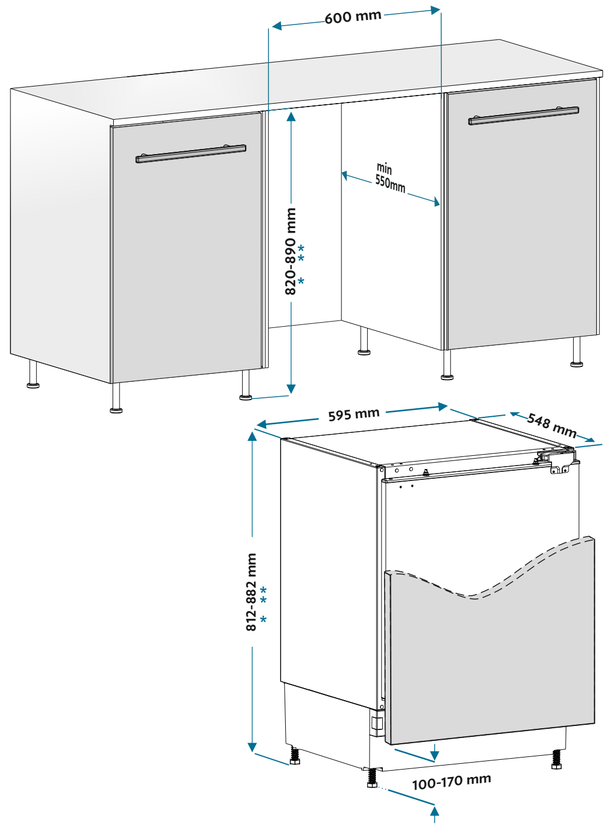
600 mm
min
550mm
820-890 mm
595 mm
548 mm
812-882 mm
100-170 mm

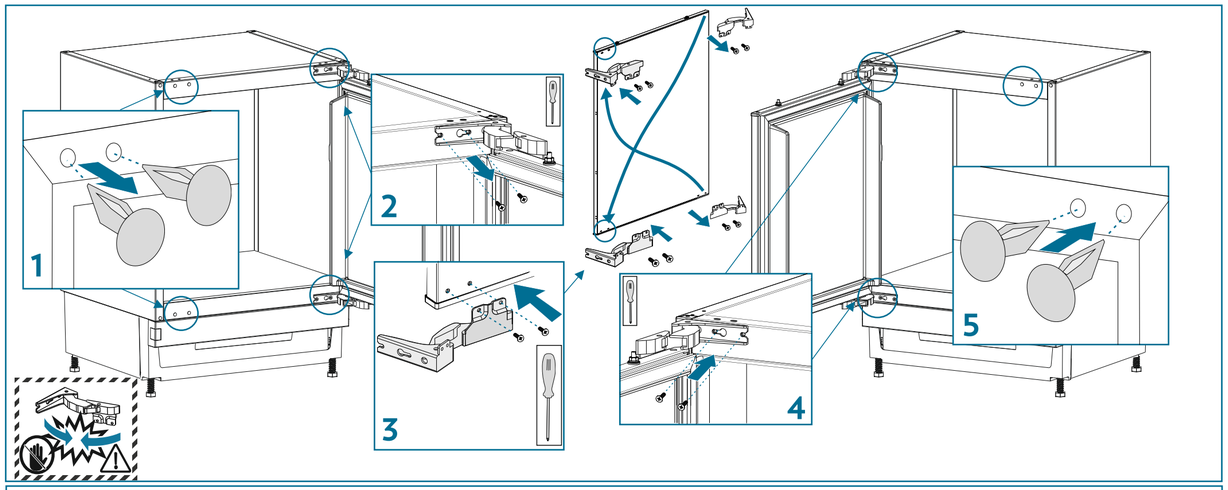
1
2
3
4
5

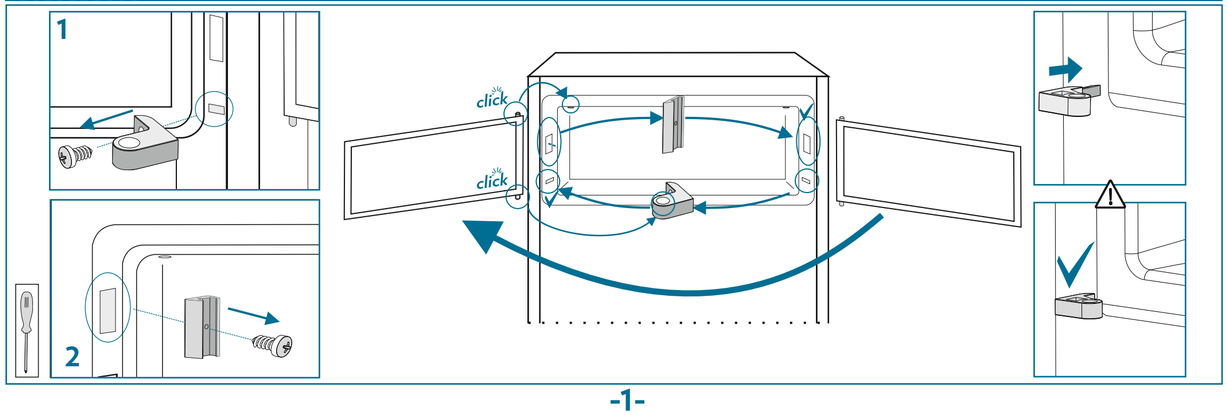
1
2
click
click

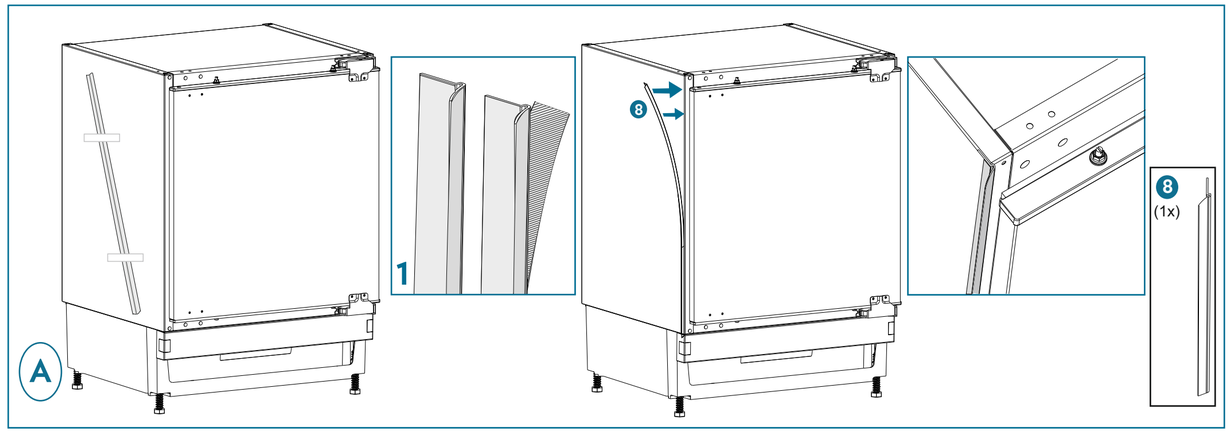
A
1
8
8
(1x)

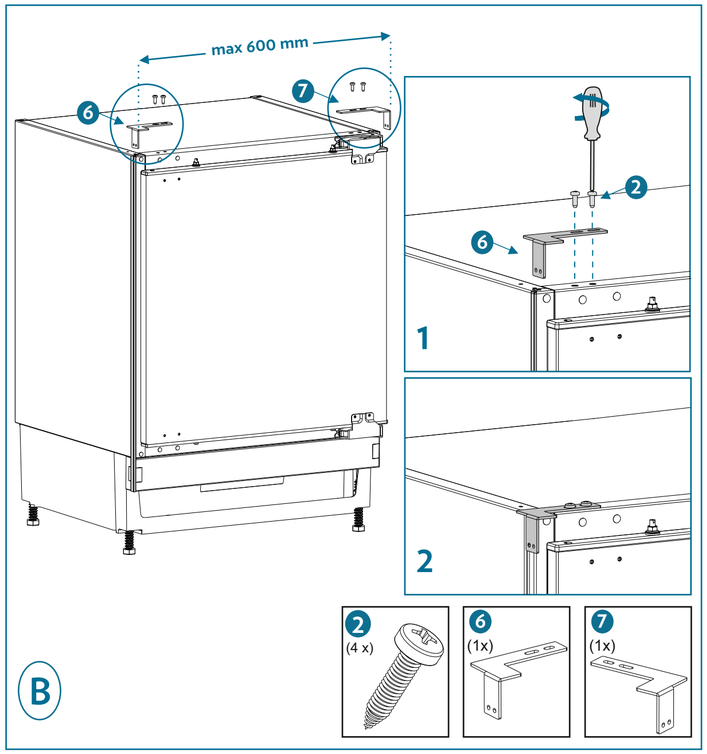
max 600 mm
6
7
2
6
1
2
2
(4 x)
6
(1x)
7
(1x)
B

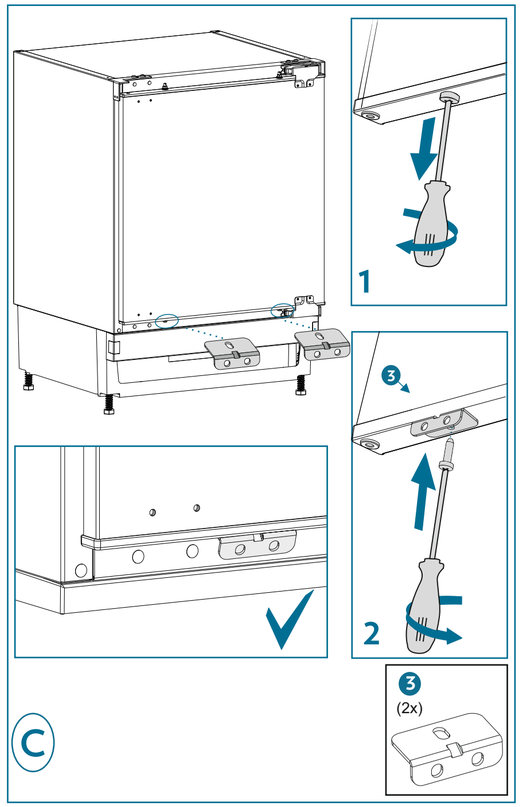
1
3
2
3
(2x)
C

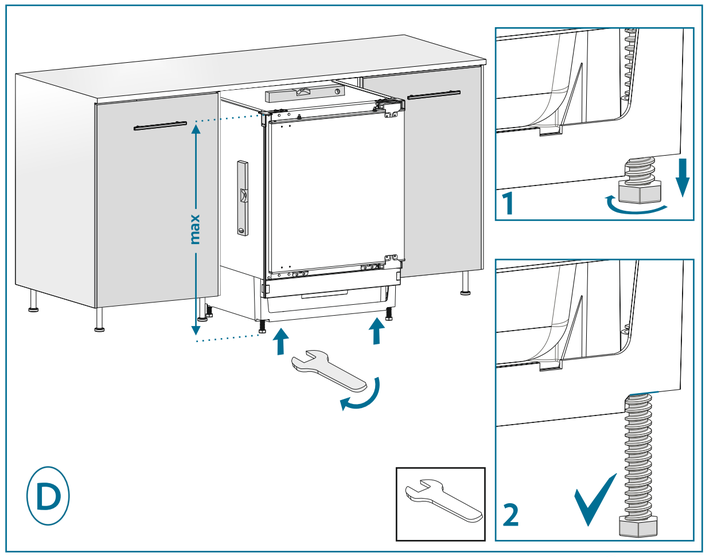
max
1
2
D

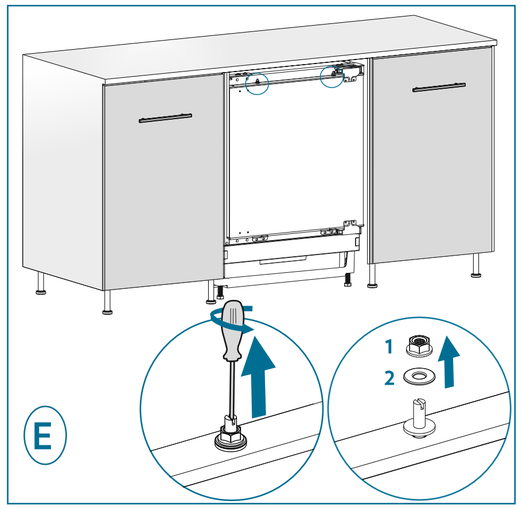
1
2
E

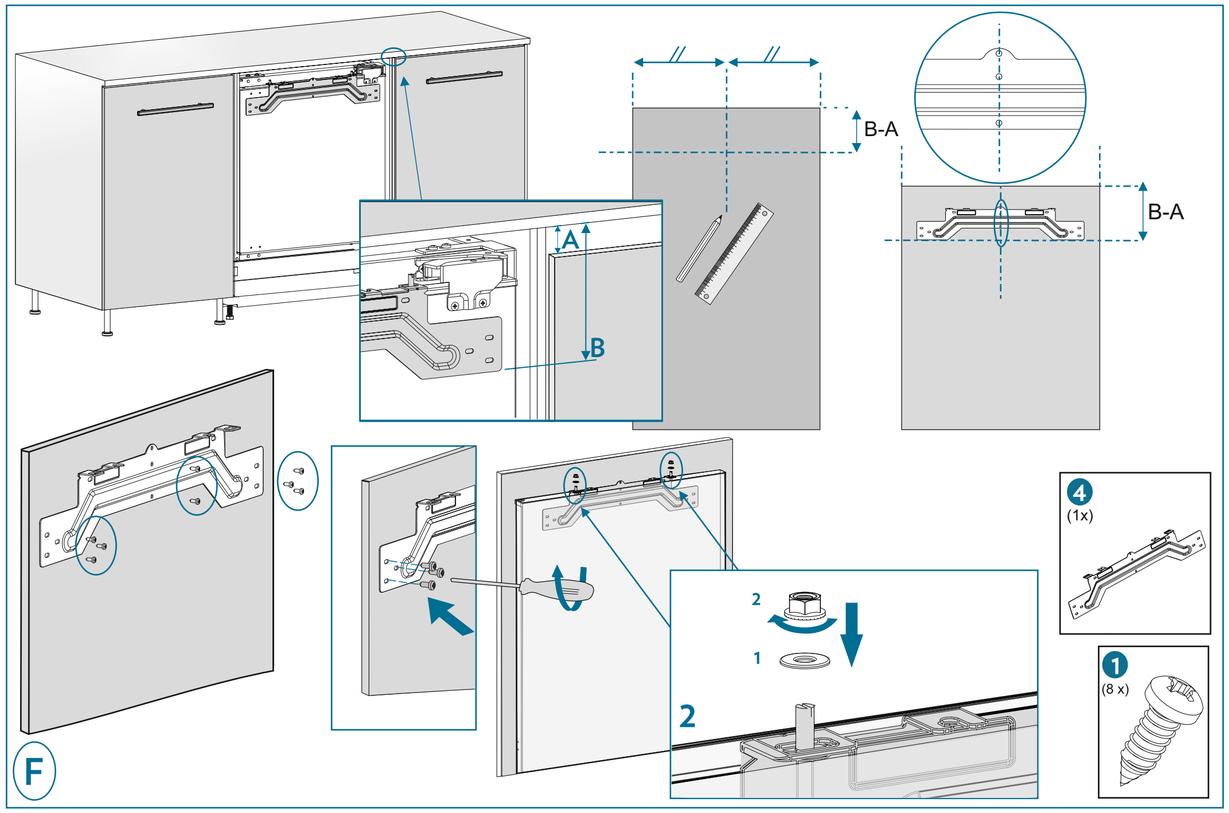
B-A
B-A
A
B
4
(1x)
2
1
2
1
(8 x)
F

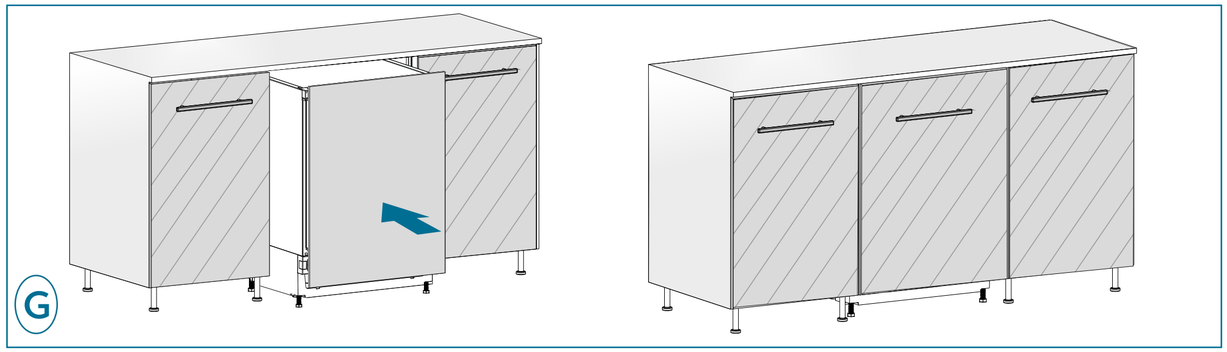
G

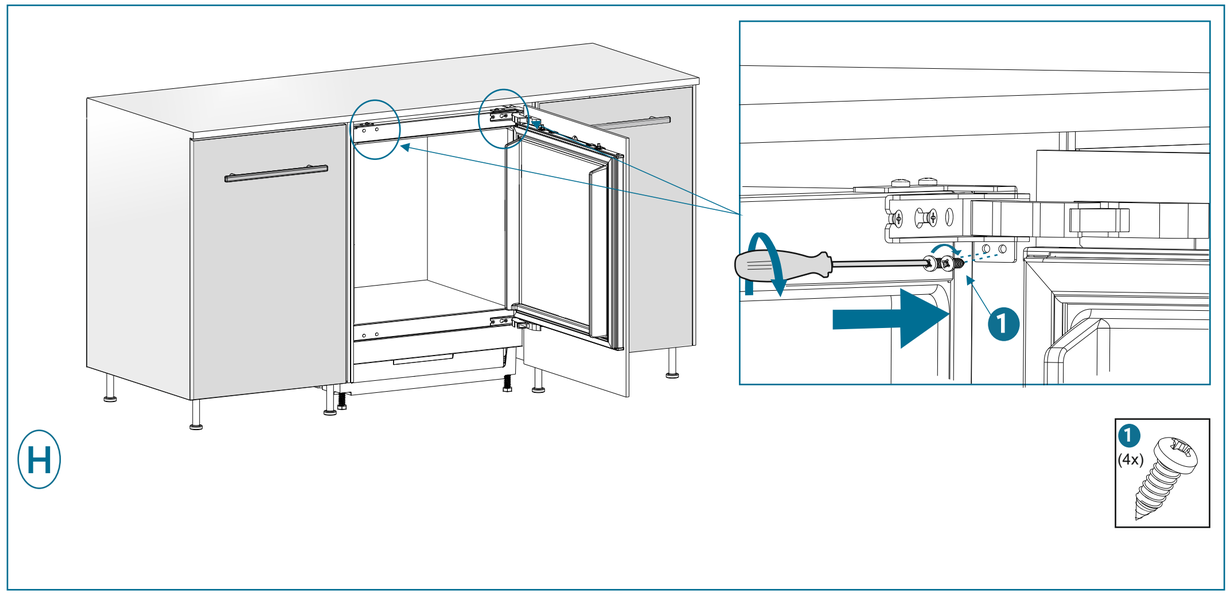
1
1
(4x)
H

Caple Service
Fourth Way
Avonmouth
Bristol
BS11 8DW

T: 0117 938 1900
E: service@caple.co.uk
www.caple.co.uk