DIMENSIONS

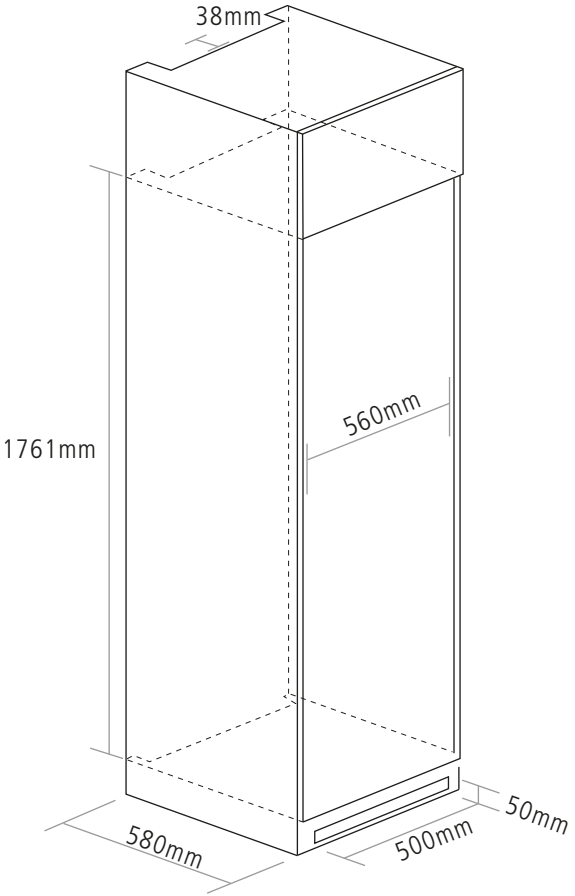
38mm
1761mm
560mm
50mm
580mm
500mm

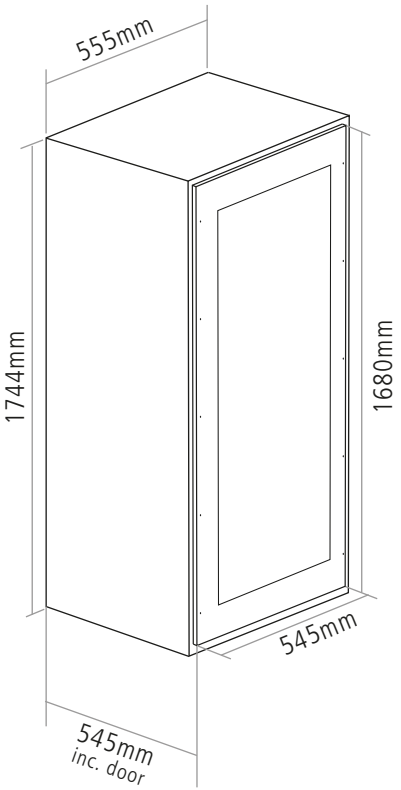
555mm
1744mm
1680mm
545mm
545mm
inc. door

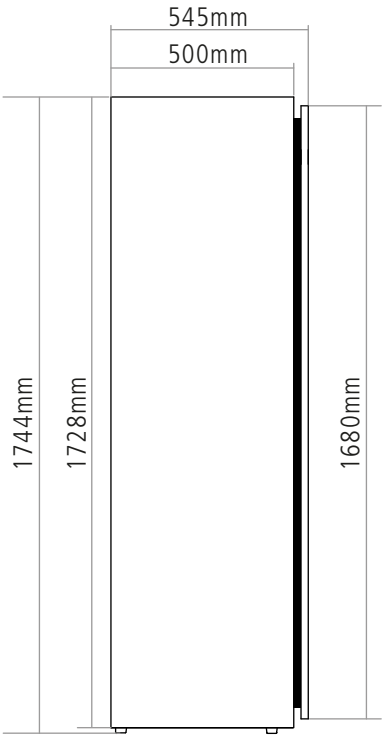
545mm
500mm
1744mm
1728mm
1680mm