MotionHeat+

DIMENSIONS

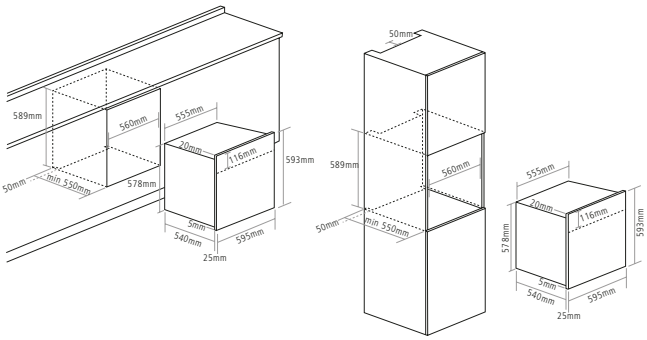

SENSE PREMIUM ELECTRIC PYROLYTIC SINGLE OVEN

PRODUCT CODE

sp C2600SS

DIMENSIONS

w:600mm

PERFORMANCE

e Energy class A

FINISH AVAILABLE

Stainless steel with black glass

FUNCTIONS

23 **Functions**

- Light
- Base heat
- Conventional heat
- Fan heat
- Fan heat + base heat
- Fan heat with top + base heat
- Fan heat + grill
- Turbo conventional heat
- Full grill
- Eco grill
- Turbo grill
- Turbo base heat
- Pyrolytic self cleaning
- Classic pizza
- Roast
- Sabbath
- Dehydrate
- Slow cook
- Proving
- Warm
- Warm+
- Defrost
- Boost [rapid preheat]

OVEN FEATURES

- WIFI connectivity
- Compatible with CapleHome App
- CapleTouch+ TFT Touch control
- MotionHeat+ technology
- Multi-stage cooking
- Favourites: Save your preferred cooking settings
- 67 Litre capacity
- Programmable timer
- Pyrolytic self-cleaning
- Easy clean enamel interior
- Two internal lights
- Child safety lock
- 5 cooking levels
- Closed door grilling
- Rotisserie cooking
- Easy to remove chrome shelf racks
- Quadruple glazed door
- Adjustable display brightness
- Night mode
- Demo mode
- Meat probe
- AutoTime [counts up]
- Full width inner door glass
- Tangential cooling fan

DESIGN

- Stainless steel square bar handle
- Colour display

ACCESSORIES

- 1 Enamelled grill rack
- 1 Rotisserie
- 1 Meat probe
- 2 Safety-stop shelves
- 1 Grill pan with handle
- 2 sets of full extension telescopic runners

OPTIONAL EXTRAS

- 1 Grill rack [ERACKPYRO]
- 1 Wire shelf [SHELF4]
- 1 Baking tray [TRAY4]
- 1 Pizza stone [PIZZASTONE]
- 1 Pizza peel [PIZZAPEEL]
- 1 Air fry tray [AIRFRY]
- Pair of full extension telescopic runners [CAPRACK8]

Visit caple.co.uk for full range

INSTALLATION

- Rated load 3.57kW
- Fuse rating 16A

Features

CAPLETOUCH+ TOUCH CONTROL

The new Sense Premium cooking range features CapleTouch+ display. Saving your family favourites, setting multi-stage cooking timers, it couldn't be easier with the intuitive interface. Download the CapleHome App to control your appliance from your smart phone or tablet.

MULTI-STAGE COOKING

Some dishes require multiple functions at different stages of cooking. Multi-stage cooking does this for you without the fuss then allows you to save the setting to your favourites to ensure perfect results every time.