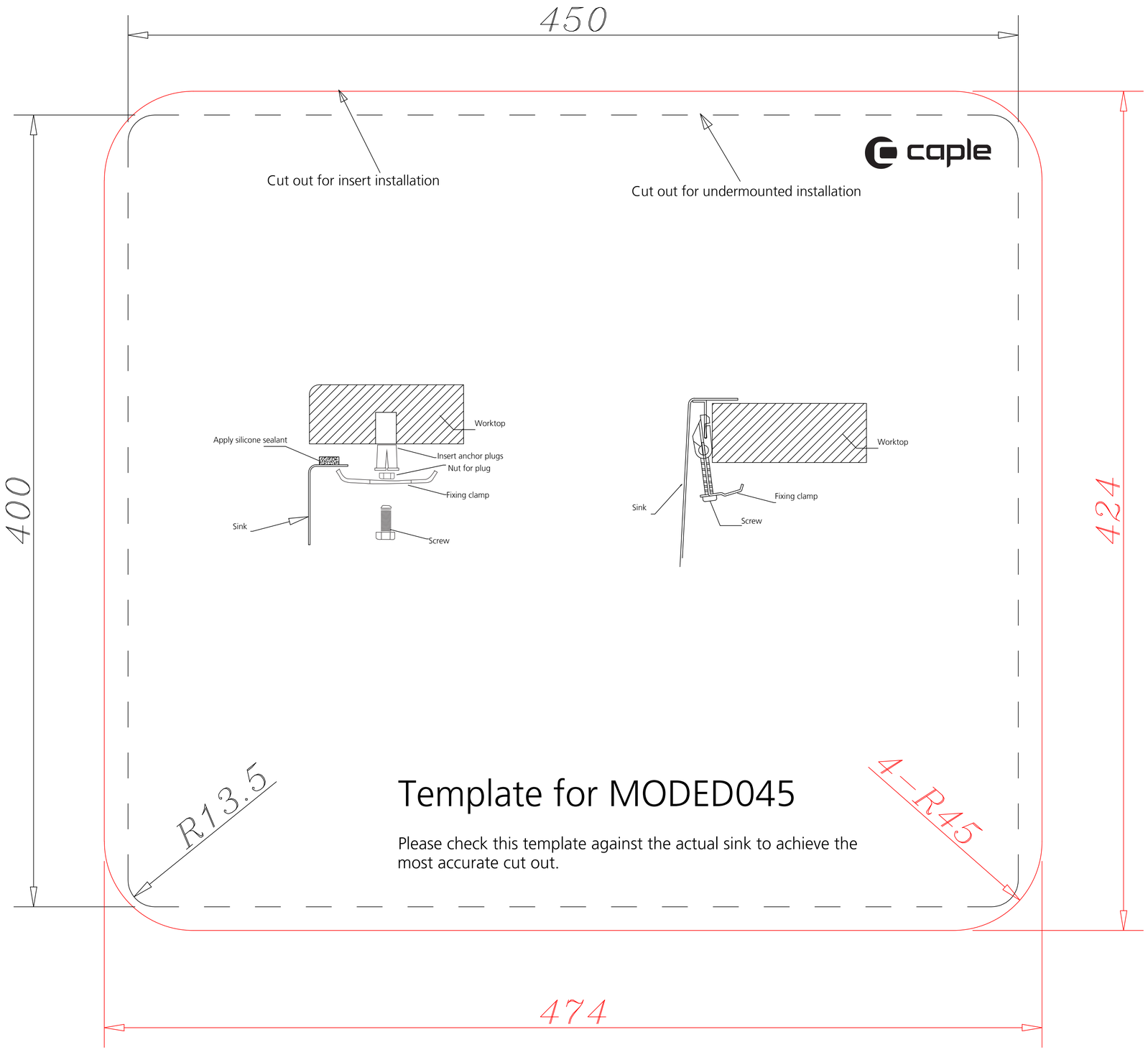

Template for MODED045

Please check this template against the actual sink to achieve the most accurate cut out.