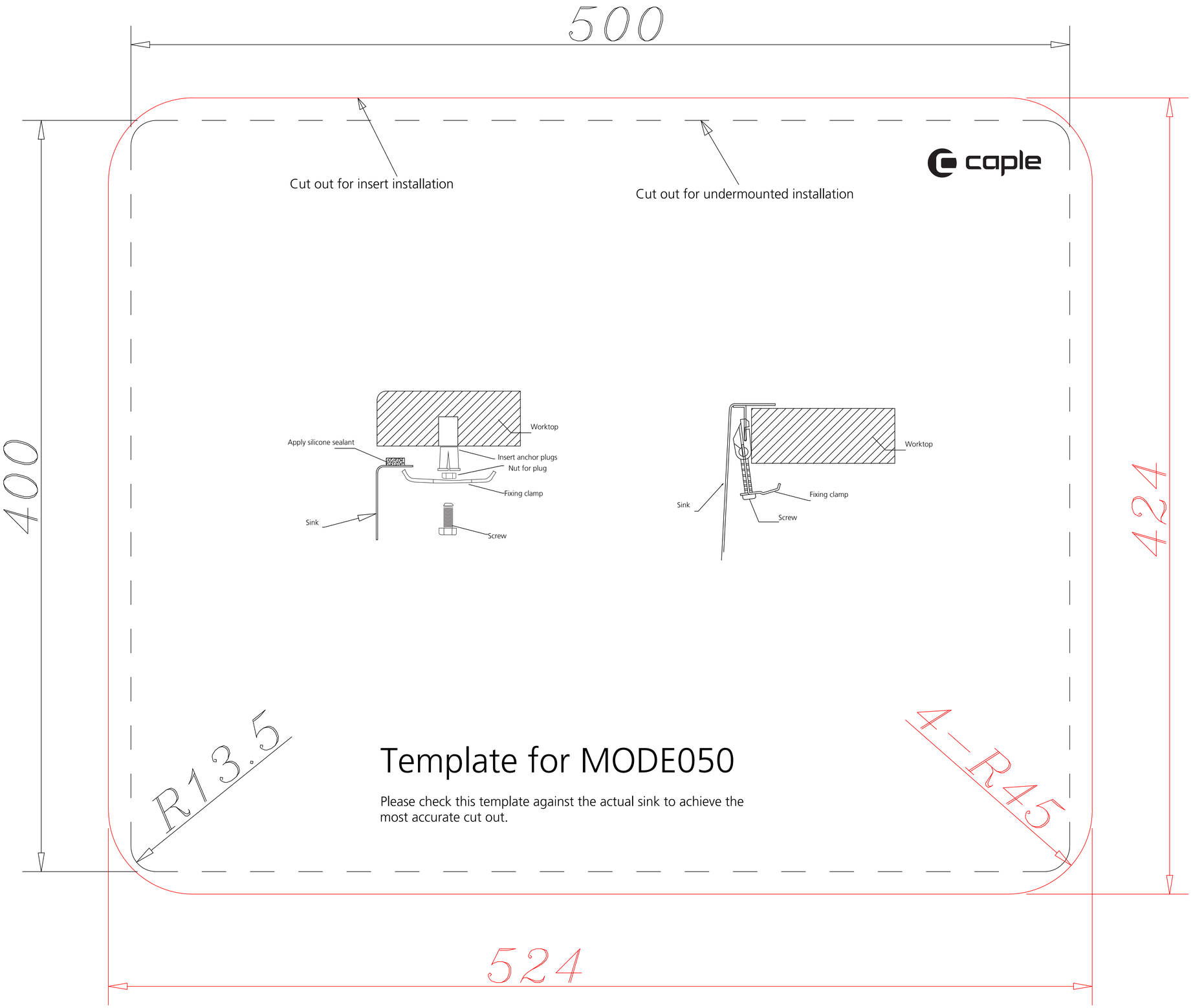


# Template for MODE050

Please check this template against the actual sink to achieve the most accurate cut out.