HARLO PURITI

PRODUCT CODE

HARPUR/SS

FINISH AVAILABLE

- Black Steel
- Copper
- Gunmetal
- Stainless Steel [shown]

TAP FEATURES

- Solid stainless steel
- Monobloc design
- Minimum 0.5 bar pressure required
- Quarter turn ceramic valve lever for filtered water
- Single lever ceramic valve for hot and cold water
- Single flow for hot and cold water
- Water filter kit included
- Separate filtered supply [filter included]

Features

CAPLE PURITI

Caple Puriti taps deliver regular hot and cold water with the added benefit of fresh filtered water, which is either dispensed using a third lever or fully integrated into the standard design. The filtration system is hidden from sight in the kitchen unit, and by turning the filtration tap, your normal cold water supply is diverted via the Caple filter to the tap and in to your glass.

DIMENSIONS

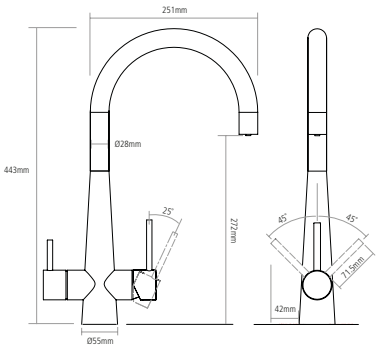

Worktop cut out 35mm required