Dimensions

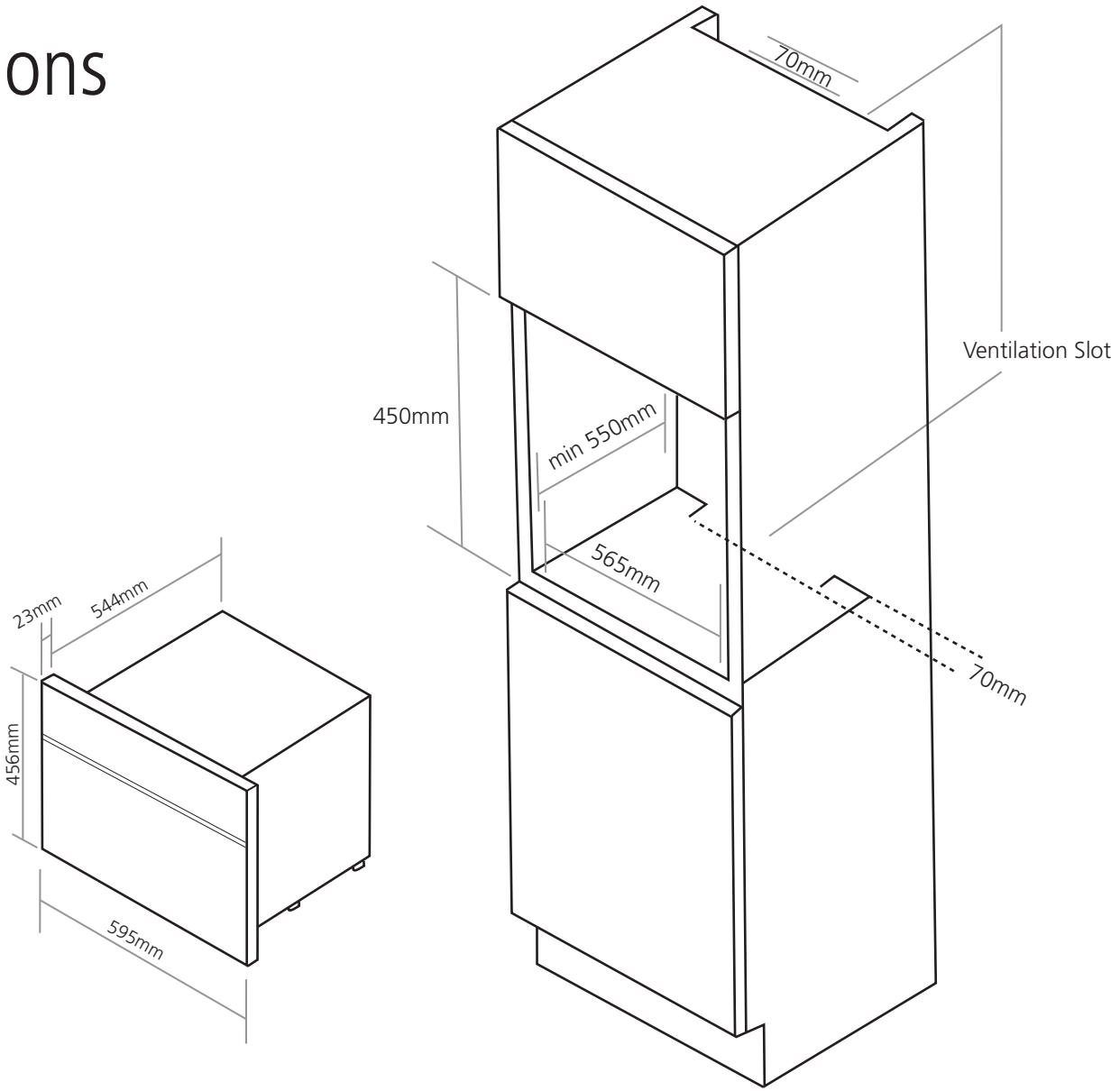
70mm
Ventilation Slot
450mm
min 550mm
565mm
70mm
23mm
544mm
456mm
595mm