CLASSIC ELECTRIC PYROLYTIC SINGLE OVEN

MotionHeat+

DIMENSIONS

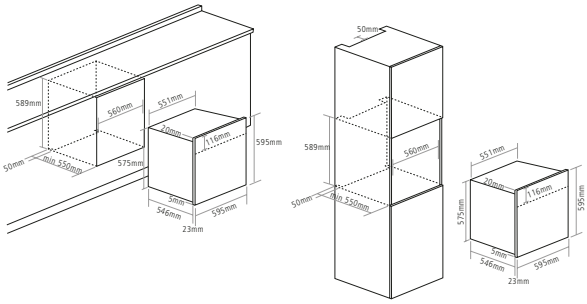

PRODUCT CODE

C C2239

DIMENSIONS

w:600mm

PERFORMANCE

e Energy class A

FINISH AVAILABLE

Stainless steel with black glass

FUNCTIONS

11 Functions

- Light
- Defrost
- Conventional heat
- Fan heat
- Eco grill
- Full grill
- Turbo grill
- Turbo base heat
- Turbo conventional heat
- Boost [rapid preheat]
- Pyrolytic self-cleaning

OVEN FEATURES

- MotionHeat+ technology
- 67 Litre capacity
- Touch control programmable electronic timer
- Electronic dial controls
- Easy to clean enamel interior
- Quadruple glazed door
- Door safety lock during pyrolytic function
- Internal light
- Closed door grilling
- Easy to remove chrome shelf racks
- Full width inner door glass
- Tangential cooling fan

DESIGN

- Square bar handle
- Green LED display

ACCESSORIES

- 1 Safety-stop shelf
- 1 Grill pan and rack with handle
- 2 sets of full extension telescopic runners [CAPRACK8]

OPTIONAL EXTRAS

- 1 Wire shelf [SHELF4]
- Pair of full extension telescopic runners [CAPRACK8]
- 1 Pizza stone [PIZZASTONE]
- 1 Pizza peel [PIZZAPEEL]
- 1 Air fry tray [AIRFRY]
- 1 Baking tray [TRAY4]

Visit caple.co.uk for full range

INSTALLATION

- Rated load 3.57kW
- Fuse rating 20A

Features

PYROLYTIC CLEANING

The Pyrolytic technology works by heating the oven to 475°C, causing even hidden & baked-on grime to carbonise into a fine ash. It saves you vast amounts of elbow grease, & actually improves oven efficiency over time too.

TELESCOPIC RUNNERS

The C2239 oven comes with two full extension telescopic runners making it easier to check food as it cooks and reducing the risk of burning yourself on the oven interior.