DOWNDRAFT EXTRACTOR WITH LIGHT

PRODUCT CODE

DD120BK

DIMENSIONS

w:1175mm

PERFORMANCE

e Energy Class A-C

FINISH AVAILABLE

Black Glass with Stainless Steel

FEATURES

- Illuminated touch controls
- For use with gas or electric hobs
- Perimetrical extraction for reduced noise and increased pressure resulting in improved motor performance
- 4 Speeds [inc.Boost function]
- Auto timer – switch-off after 10mins
- Bright 21W white neon light
- Aluminium grease filters
- Required ducting size 150mm
- Recirculation kit available
- Motor not included

MOTOR CHOICES

- Downdraft extractors will need to be purchased with a motor.

OPTIONAL EXTRAS

- Recirculation kit [CAP69CF - only for use with motors DDMEXT11 and DDMEXT28]

Visit caple.co.uk for full range

INSTALLATION

- The electrics box must be located at least 650mm from the hob

Venting choices

Ensure you purchase the correct venting for your Caple extractor.

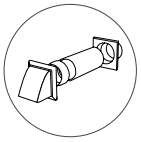
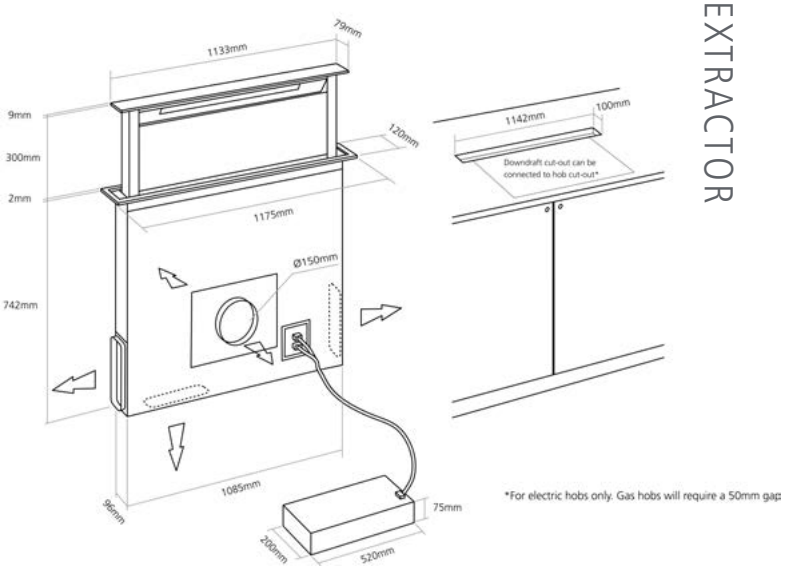
DIMENSIONS