GAS HOBS

PRODUCT CODE

C774G

DIMENSIONS

w:860mm

FINISH AVAILABLE

Stainless steel

FEATURES

- Flame safety device
- Cast iron pan supports
- Auto electronic ignition
- LPG jets included

COOKING OUTPUT

5 Gas Burners

- 1 Triple ring burner: 3.3kW
- 1 Rapid burner: 3kW
- 2 Semi-rapid burners: 1.75kW
- 1 Simmer burner: 1kW

OPTIONAL EXTRAS

- Cast iron induction griddle [IGRIDDLE2]
  Visit caple.co.uk for full range

INSTALLATION

- Fuse rating 3A
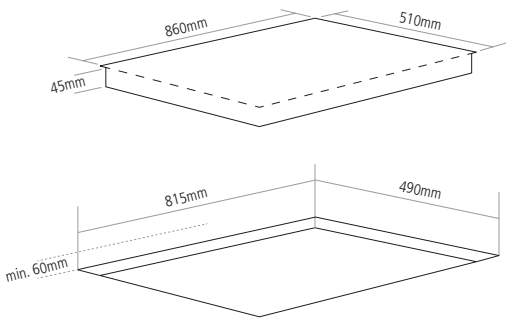
DIMENSIONS