SENSE ELECTRIC DOUBLE OVEN

MotionHeat+

PRODUCT CODE

S C3371

DIMENSIONS

w:595mm

PERFORMANCE

e

Top Oven	A
Bottom Oven	A

FINISH AVAILABLE

Black glass with Stainless steel trim

FUNCTIONS

4 Top Oven

- Conventional Heat
- Full Grill
- Base Heat
- Top Heat

8 Bottom Oven

- Light
- Turbo defrost
- Conventional heat
- Fan heat
- Eco grill
- Full grill
- Turbo grill
- Turbo base heat

OVEN FEATURES

Top Oven

- 40 Litre capacity

Bottom Oven

- 61 Litre capacity

GENERAL

- MotionHeat+ technology
- Touch control programmable electronic timer
- Metal dial controls
- Triple glazed doors with heat reflective glass
- Easy clean enamel interior
- Removable chrome shelf racks
- Catalytic liners in both oven cavities
- Tangential cooling fan

DESIGN

- Stainless steel square bar handle
- White LED display

ACCESSORIES

- 1 Safety stop shelf in top oven
- 1 Safety stop shelf in bottom oven
- 1 Grill pan with handle in top oven
- 1 Enamelled baking tray in bottom oven
- 2 Pairs of full extension telescopic runners

OPTIONAL EXTRAS

- 1 Wire shelf [SHELF3]
- 1 set of full extension telescopic runners [CAPRACK8]

Visit caple.co.uk for full range

INSTALLATION

- Diagram [p.216]
- Rated load 5.19kW
- Fuse rating 32A
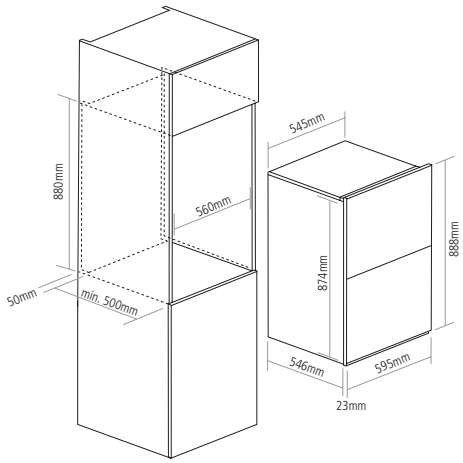
DIMENSIONS