DIMENSIONS

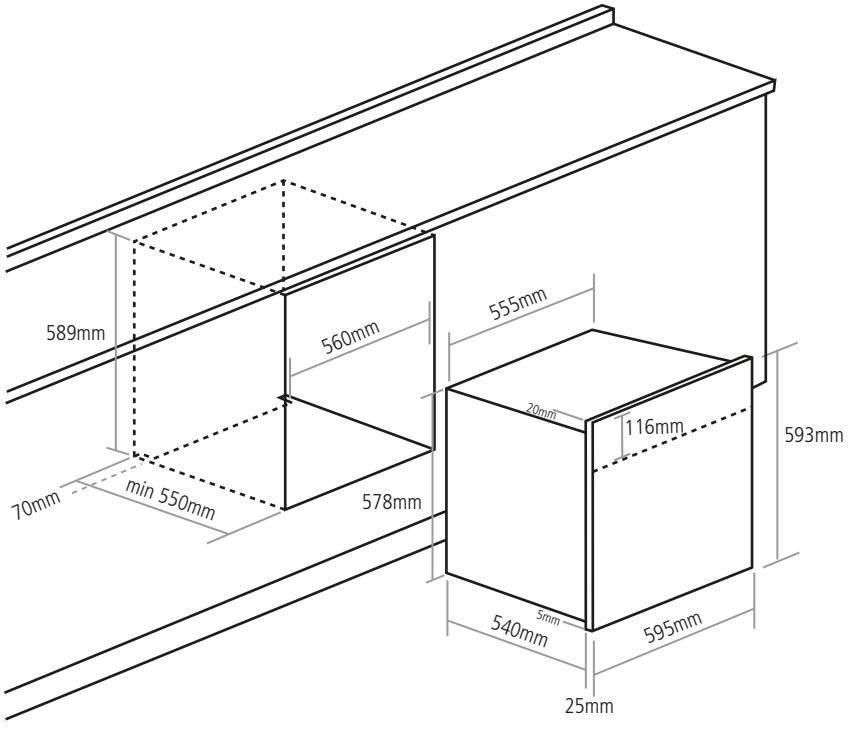
589mm
560mm
555mm
20mm
116mm
593mm
70mm
min 550mm
578mm
5mm
540mm
595mm
25mm

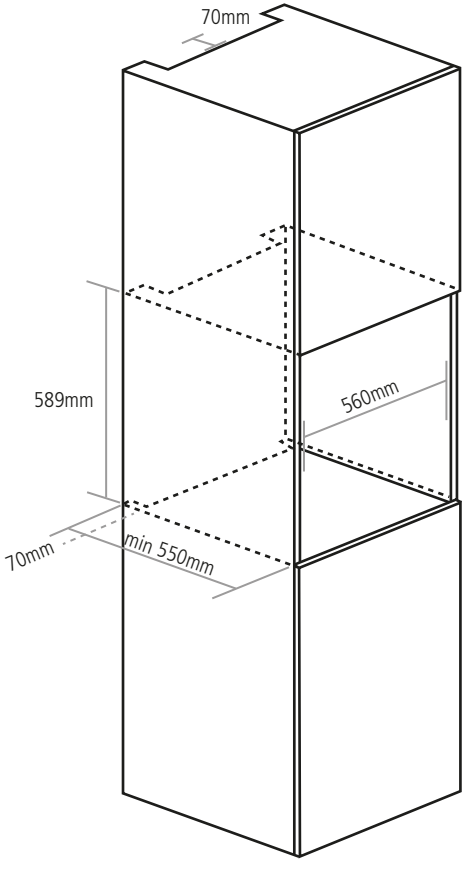
70mm
589mm
560mm
70mm
min 550mm

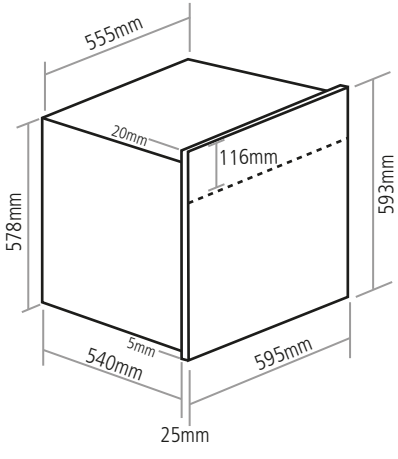
555mm
20mm
116mm
593mm
578mm
5mm
540mm
595mm
25mm