DIMENSIONS

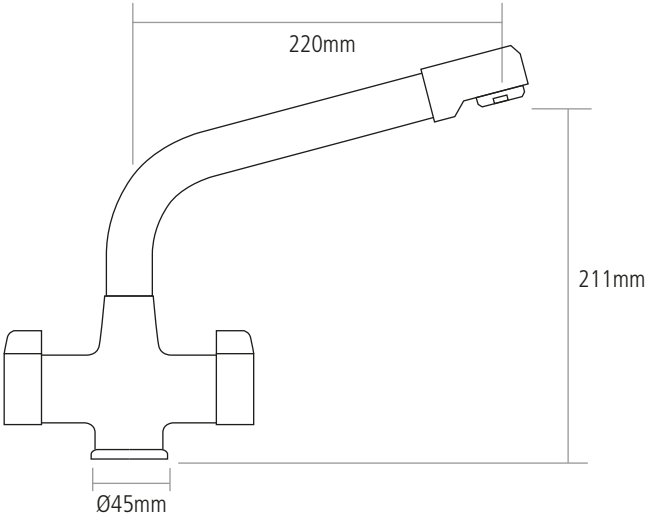

Worktop cut-out 35mm required